CASmo-NFC-MB_V0.2 (Ethernet PoE)

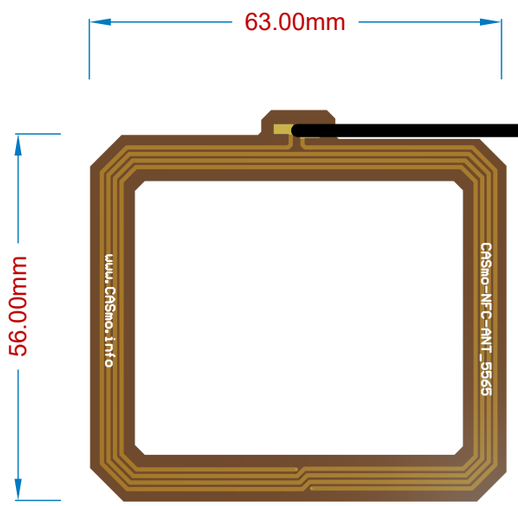

cable length: 150mm

PN532 (NFC chip)

PIN	GPIO (ESP)
SS	IO:5
SCK	IO:14
MISO	IO:12
MOSI	IO:13

3x STATUS LED

Color	GPIO (ESP)
RED	IO:32
GREEN	IO:33
BLUE	IO:15

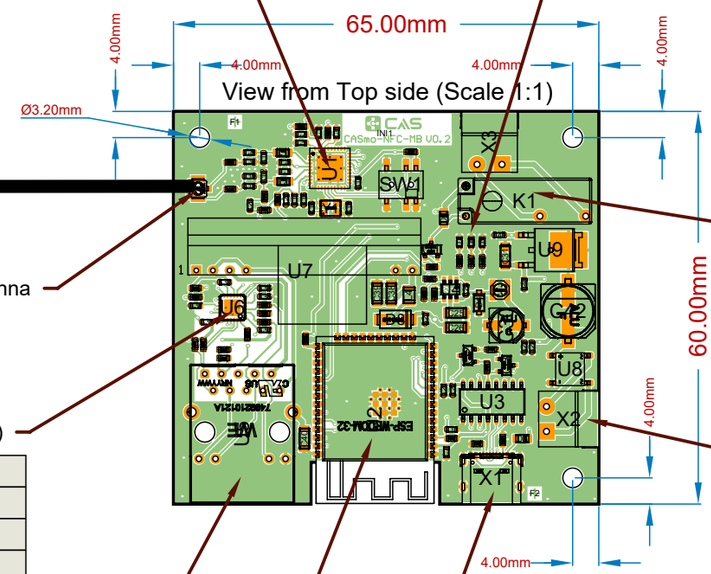

IPEX MHF (2mm) for external NFC antenna

LAN8720 (ethernet chip)

PIN	HK Settings
PHY Address	set to : 1
MCD	set to : 23
MDIO	set to : 18
Power	set to : -1

K1 + X3
230V/10A Relay HF46F-005-HS1

PIN	GPIO (ESP)
Relay	IO:2

POWER SUPPLY
AC or DC up to 24V
(no polarity)

USB-C (flashing port)
can also be used for power supply

ETHERNET
incl. PoE

ESP32WROOM32EN4
4MB

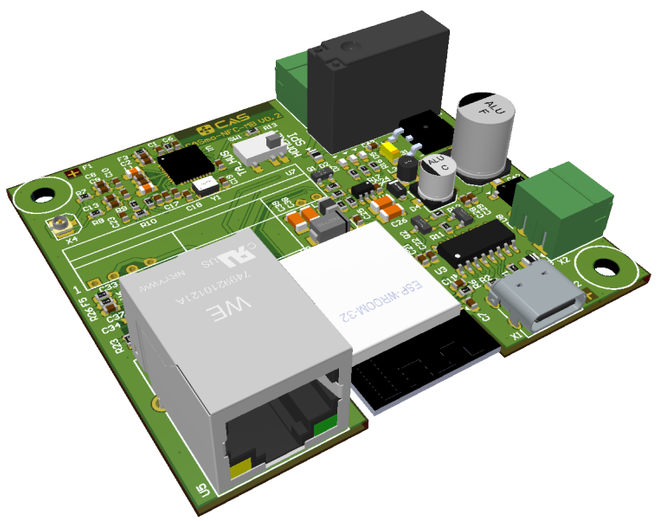

Title: CASmo-NFC-MB	Ver.V0.2	Size: A4
File: CASmo-NFC-MB_PCB.PCBDwf		Sheet 1 of 1
Drawn By: D.Schnell		
Date: 01.06.2025		
Modified: 01.06.202520:40		